2002B

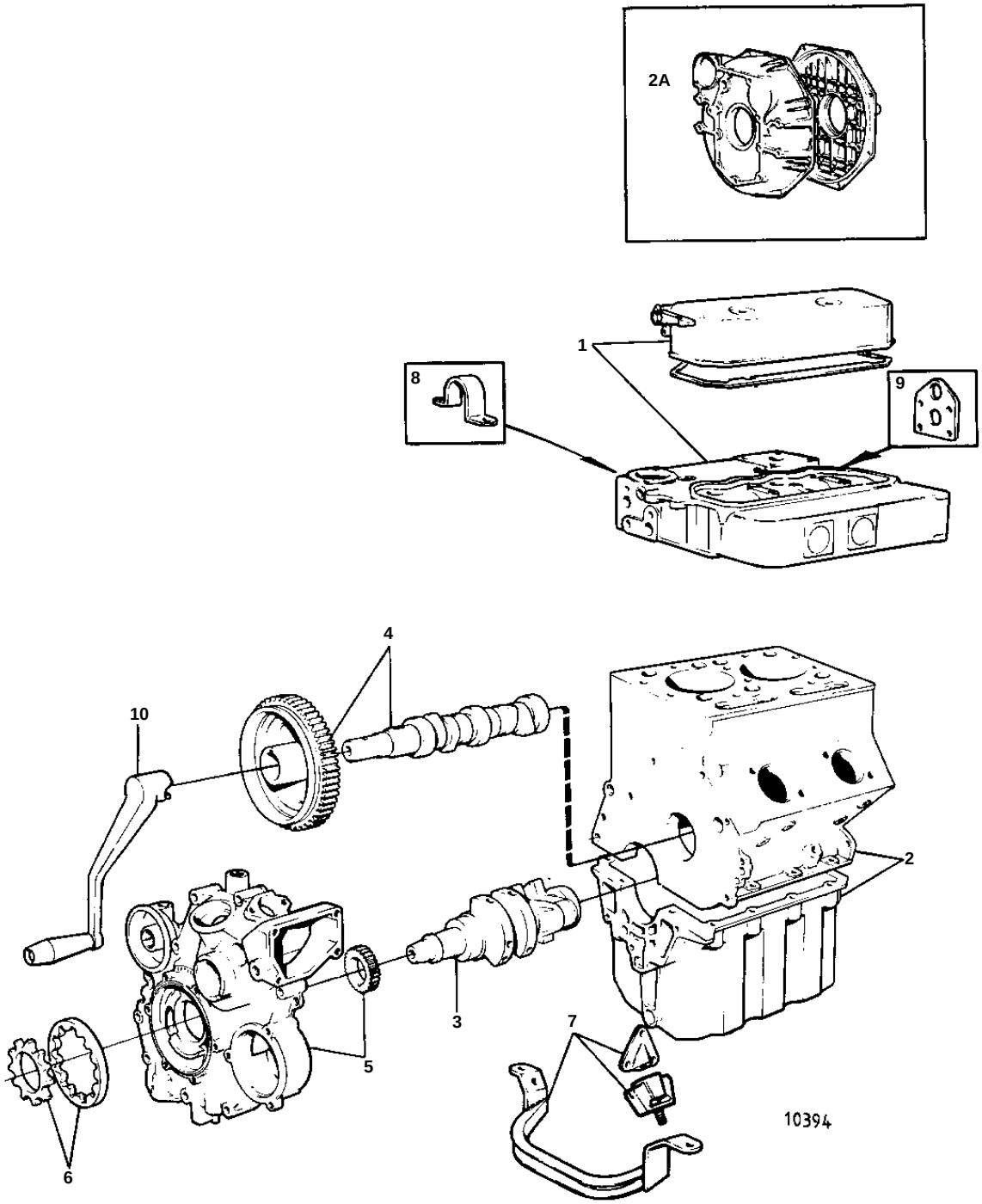

2002B

REF	QTY	DESCRIPTION		SEE SEC.	NOTES
1	1	CYLINDER HEAD		02A-4120	
2	1	CYLINDER BLOCK		02A-5120	
2A	1	FLYWHEEL COVER		02A-5800	
3	1	CRANKSHAFT AND RELATED PARTS		02A-6130	
4	1	CAMSHAFT AND VALVE MECHANISM		02A-7120	
5	1	TIMING GEAR COVER AND GEARS		02A-8120	
6	1	LUBRICATING SYSTEM		02A-8600	
7	1	ENGINE MOUNTS		02A-9220	
8	1	LIFT IRON			SEE GROUP 2B
9	1	LIFT IRON			SEE GROUP 2B
10	1	STARTING CRANK			SEE GROUP 9. MISCELLANEOUS EQUIPMENT.
					SN-2300059084